Stex 45 Threaded bolt GB M12 x 70 mm

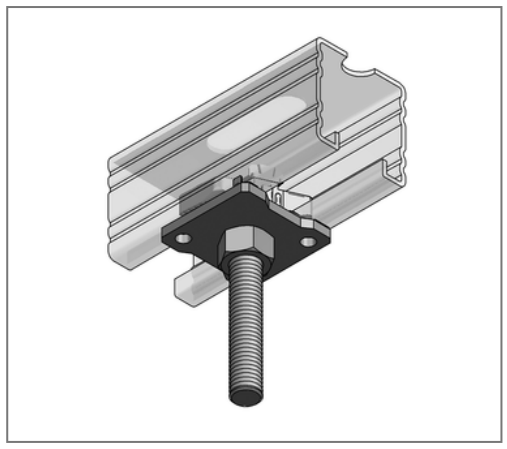

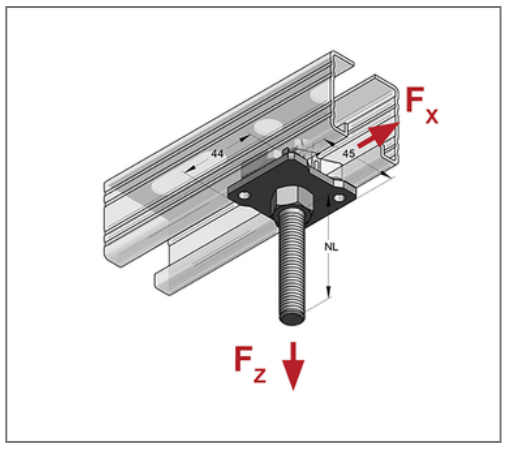

Commercial details

Part no.	1283070
EAN/GTIN	4250928424846
Packing unit	20 pcs
Quantity unit	pcs
Weight	0,174 kg/pc
Product group	02-128
Price unit	1

QR code

Specification

Application area	Quick-fixing system for direct pipe clamp attachment to Stex profile rails with permanently integrated threaded bolt and nut.

Technical data

Material	Steel
Material type	S235
Surface	galvanized
Corrosion category	C2 very high
Surrounding area	Indoor area
Strength class	4.6

Product details

Thread	M12
Length thread	70 mm
Usable length	27 mm