Threaded plate M8 square 17x17 mm galv.

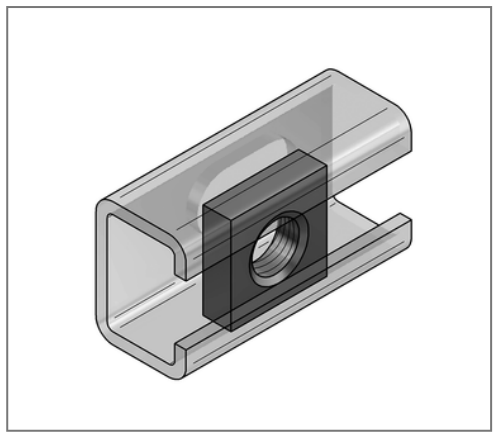

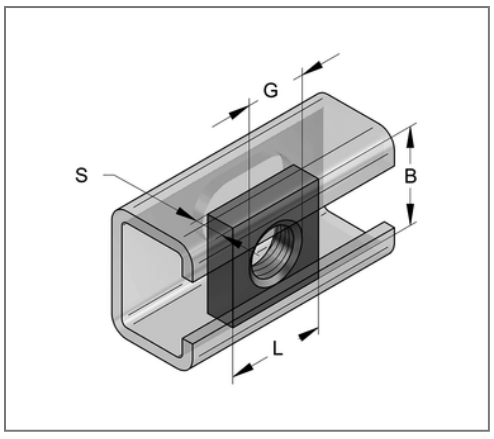

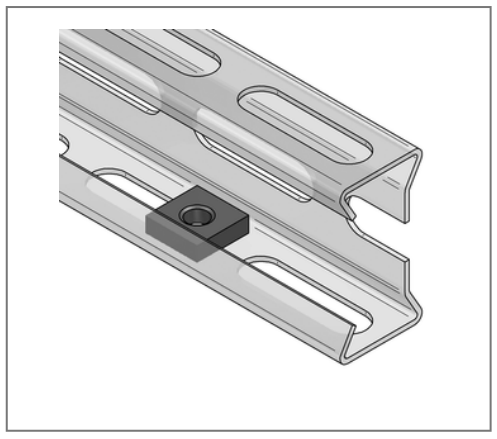

Commercial details

Part no.	0740020
EAN/GTIN	4250928417107
Packing unit	100 pcs
Quantity unit	pcs
Weight	0,0099 kg/pc
Product group	02-074
Price unit	100

QR code

Technical data

Material	Steel
Material type	S235
Surface	galvanized
Corrosion category	C2 very high
Surrounding area	Indoor area

Product details

Loading capacity	see loads in the cataloge
Length L	17 mm
Width B	17 mm
Material thickness S	5 mm
Thread G	M8
Profile type	LP50
Shape	square

MEFA Befestigungs- und Montagesysteme GmbH | Schillerstraße 15 | 74635 Kupferzell
+ 49 7944 64 0 | info@mefa.de | www.mefa.de