# Threaded plate M6 square 17x17 mm galv.

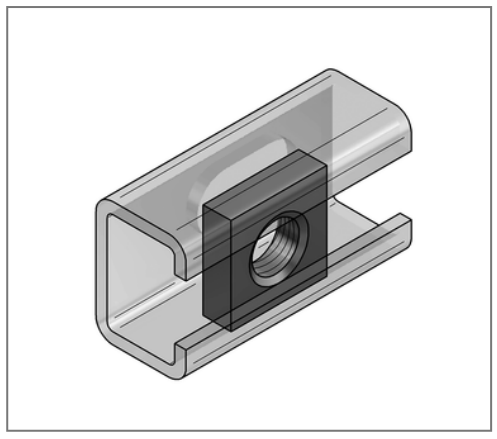

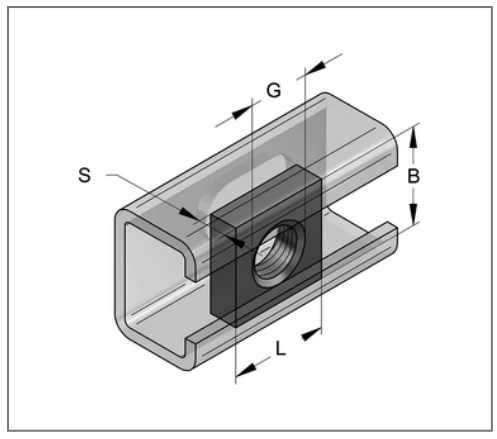


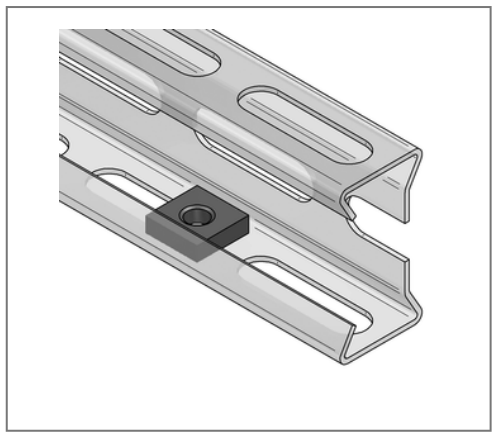

## Commercial details

| | |
|---|---|
| Part no. | 0740012 |
| EAN/GTIN | 4250928417091 |
| Packing unit | 100 pcs |
| Quantity unit | pcs |
| Weight | 0,0105 kg/pc |
| Product group | 02-074 |
| Price unit | 100 |

## QR code

## Technical data

| | |
|---|---|
| Material | Steel |
| Material type | S235 |
| Surface | galvanized |
| Corrosion category | C2 very high |
| Surrounding area | Indoor area |

## Product details

| | |
|---|---|
| Loading capacity | see loads in the cataloge |
| Length L | 17 mm |
| Width B | 17 mm |
| Material thickness S | 5 mm |
| Thread G | M6 |
| Profile type | LP50 |
| Shape | square |

MEFA Befestigungs- und Montagesysteme GmbH | Schillerstraße 15 | 74635 Kupferzell
+ 49 7944 64 0 | info@mefa.de | www.mefa.de