Suspending console 2-hole Height 100 mm for thread M8

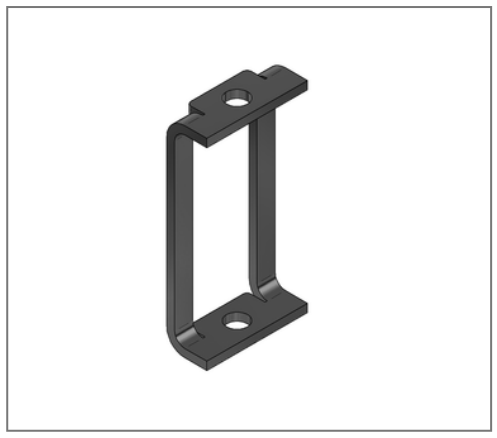

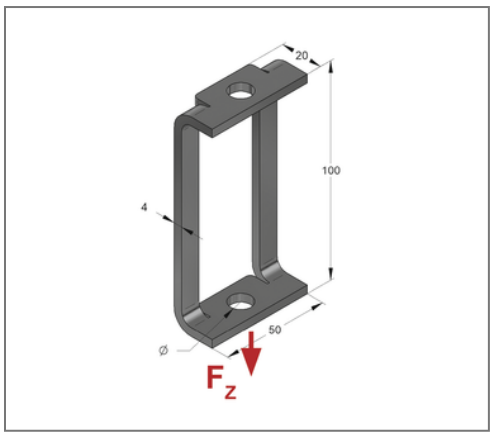

Commercial details

Part no.	0812190
EAN/GTIN	4250928469496
Packing unit	50 pcs
Quantity unit	pcs
Weight	0,109 kg/pc
Product group	02-081
Price unit	1

QR code

Technical data

Material	Steel
Material type	S235
Surface	galvanized
Corrosion category	C2 very high
Surrounding area	Indoor area

Product details

Width	50 mm
Height	100 mm
Load F_Z	1,9 kN
Length	20 mm
for thread	M8
Hole-Ø	8,5 mm

MEFA Befestigungs- und Montagesysteme GmbH | Schillerstraße 15 | 74635 Kupferzell
+ 49 7944 64 0 | info@mefa.de | www.mefa.de