SIGNUM Insulation lining LP50 10 m Rubber

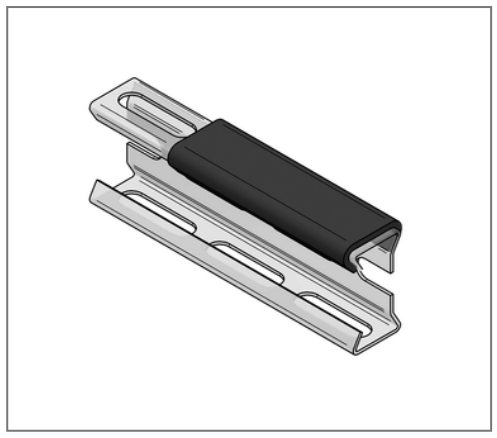

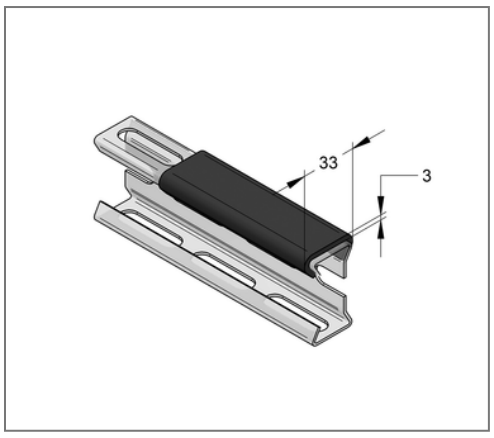



Commercial details

Part no.	7100036
EAN/GTIN	4250928467904
Packing unit	10 m
Quantity unit	m
Weight	0,221 kg/m
Product group	08-710
Price unit	1

QR code

Certification

SCHALL-SCHUTZ DIN 4109

Specification

Application area	Sound, dirt and insulation protection between the profile and the supporting part (e.g. ventilation ducts).

Technical data

Material	Rubber
Material type	TPE
min. temperature resistance	-35 °C
max. temperature resistance	100 °C
Colour	black

Product details

Width	33 mm
Length	10 m

MEFA Befestigungs- und Montagesysteme GmbH | Schillerstraße 15 | 74635 Kupferzell
+ 49 7944 64 0 | info@mefa.de | www.mefa.de