SIGNUM LP50 Packing unit: 144 m 27 / 50 / 1,5 mm L= 6 m pre-galv.

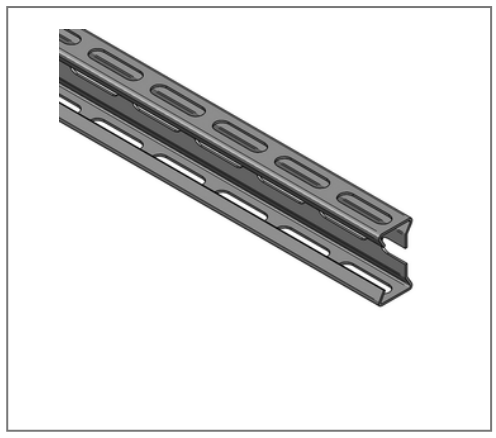

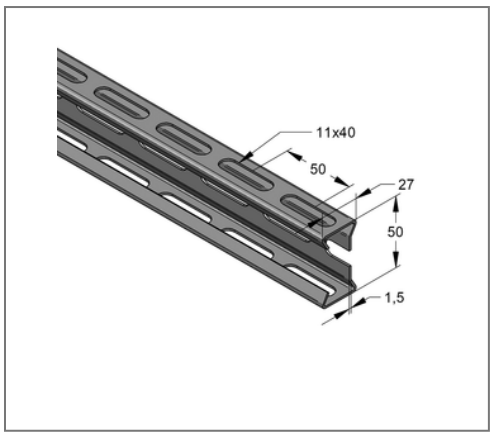

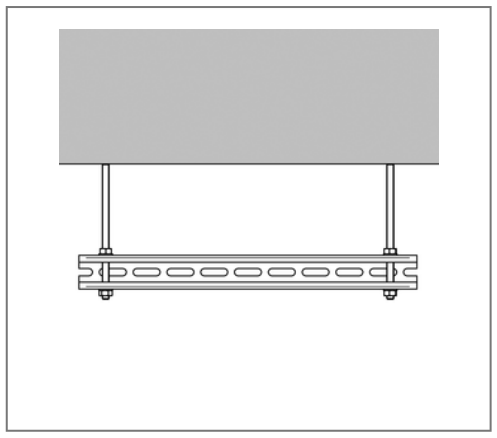

Commercial details

Part no.	0800202-0144
EAN/GTIN	4250928468055
Packing unit	144 m
Bundle	576 m
Quantity unit	m
Weight	1,11 kg/m
Product group	08-985
Price unit	1

QR code

Certification

DIN EN 1993-1-2

Technical data

Material	Steel
Material type	S250
Surface	pre-galvanized
Corrosion category	C2 very high
Surrounding area	Indoor area

Product details

Width	27 mm
Height	50 mm
Thickness	1,5 mm
Length	6 m
Elongated hole	11x40 mm
Area (least cross section of the profile rail)	1,29 cm²
Axial angular impulse I_Y	5,01 cm4
Axial angular impulse I_Z	1,26 cm4
Grid dimension	50 mm
Rail slot width	11 mm
Centroid distance eo	2,5 cm
Centroid distance eu	2,5 cm
Centroid distance ez	1,54 cm
Elastic limit	250 N/mm²
Radius of inertia iy	1,97 cm
Radius of inertia iz	1,37 cm
Section modulus W_Y	2,01 cm³
Section modulus W_Z	0,87 cm³

MEFA Befestigungs- und Montagesysteme GmbH | Schillerstraße 15 | 74635 Kupferzell
+ 49 7944 64 0 | info@mefa.de | www.mefa.de