# SIGNUM LP50 Packing unit: 576 m 27 / 50 / 1,5 mm L= 2 m pre-galv.

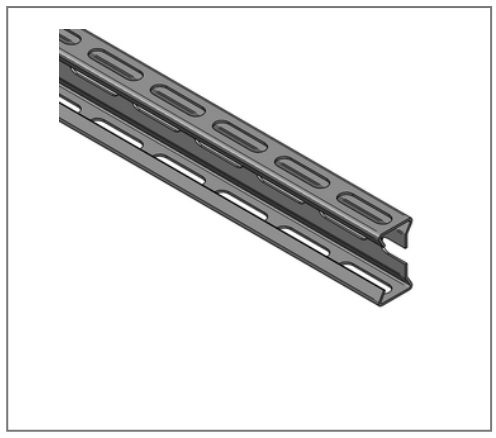

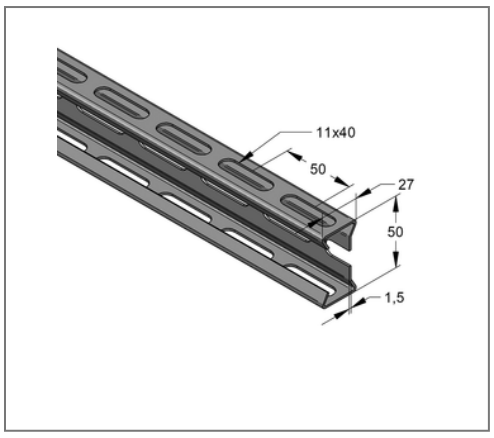


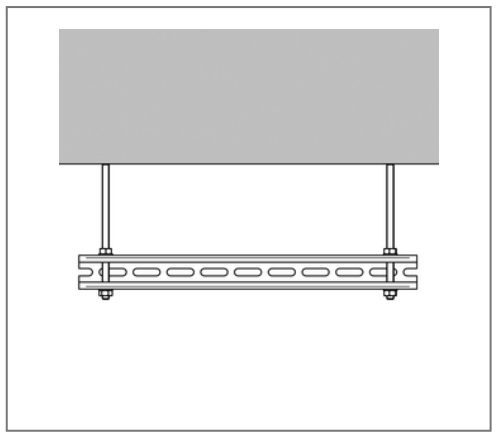

## Commercial details

| | |
|---|---|
| Part no. | 0800201-0576 |
| EAN/GTIN | 4250928468024 |
| Packing unit | 576 m |
| Bundle | 216 m |
| Quantity unit | m |
| Weight | 1,11 kg/m |
| Product group | 08-985 |
| Price unit | 1 |

## QR code

## Certification

DIN EN 1993-1-2

## Technical data

| | |
|---|---|
| Material | Steel |
| Material type | S250 |
| Surface | pre-galvanized |
| Corrosion category | C2 very high |
| Surrounding area | Indoor area |

## Product details

| | |
|---|---|
| Width | 27 mm |
| Height | 50 mm |
| Thickness | 1,5 mm |
| Length | 2 m |
| Elongated hole | 11x40 mm |
| Area (least cross section of the profile rail) | 1,29 cm² |
| Axial angular impulse $I_Y$ | 5,01 cm4 |
| Axial angular impulse $I_Z$ | 1,26 cm4 |
| Grid dimension | 50 mm |
| Rail slot width | 11 mm |
| Centroid distance eo | 2,5 cm |
| Centroid distance eu | 2,5 cm |
| Centroid distance ez | 1,54 cm |
| Elastic limit | 250 N/mm² |
| Radius of inertia iy | 1,97 cm |
| Radius of inertia iz | 1,37 cm |
| Section modulus $W_Y$ | 2,01 cm³ |
| Section modulus $W_Z$ | 0,87 cm³ |

MEFA Befestigungs- und Montagesysteme GmbH | Schillerstraße 15 | 74635 Kupferzell
+ 49 7944 64 0 | info@mefa.de | www.mefa.de