SIGNUM Insulation rubber LP50 10 m Rubber

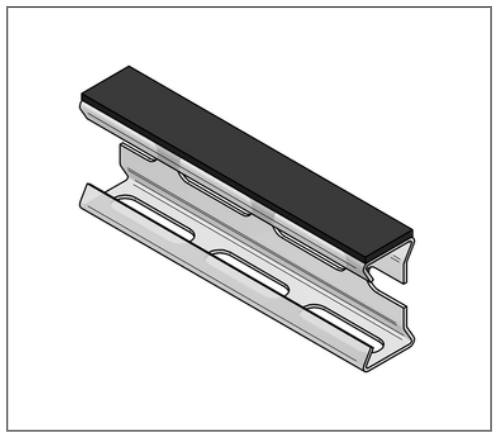

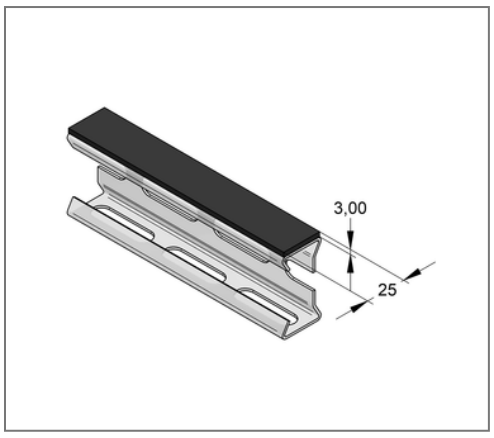

Commercial details

Part no.	72102032
EAN/GTIN	4250928467898
Packing unit	10 m
Quantity unit	m
Weight	0,119 kg/m
Product group	08-985
Price unit	1

QR code

Certification

SCHALL-SCHUTZ DIN 4109

Specification

Application area	Sound, dirt and insulation protection between the profile and the supporting part (e.g. ventilation ducts).
Specification	self-adhesive

Technical data

Material	Rubber
Material type	EPDM
min. temperature resistance	-35 °C
max. temperature resistance	100 °C
Colour	black

Product details

Width	25 mm
Length	10 m

MEFA Befestigungs- und Montagesysteme GmbH | Schillerstraße 15 | 74635 Kupferzell
+ 49 7944 64 0 | info@mefa.de | www.mefa.de