Sliding support T h=110 35 x 4 mm 40 - 42 mm TPE hot-dip galv.

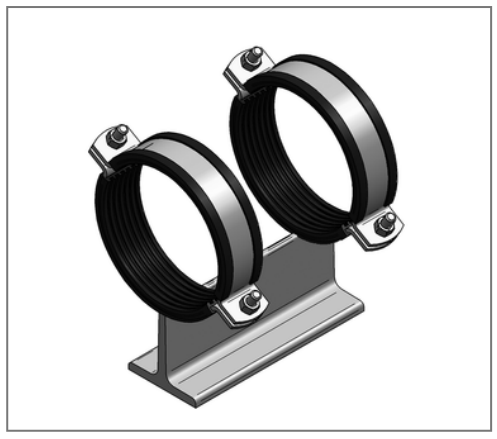

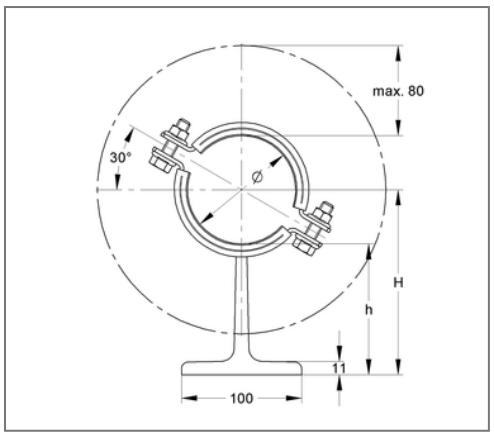

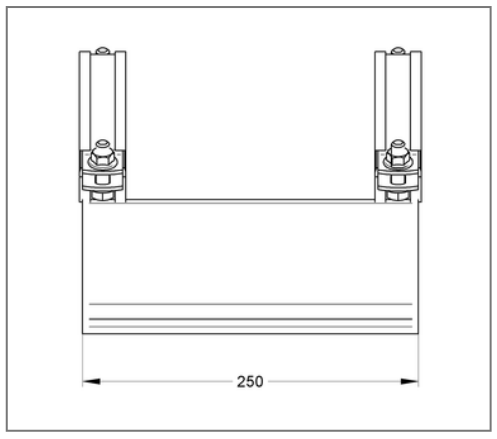

Commercial details

Part no.	145fb0042
EAN/GTIN	4250928460080
Packing unit	1 pcs
Quantity unit	pcs
Weight	5,32 kg/pc
Product group	14-148
Price unit	1

QR code

Certification

SCHALL-SCHUTZ DIN 4109

Baustoffklasse B2 "Normal entflammbar" nach DIN 4102

Specification

Specification	T-support
Closure screw	M10

Technical data

Material	Steel
Material type	S235
Surface	hot-dip galvanized
Corrosion category	C4 high / C5 medium
Surrounding area	Indoor and outdoor areas
Insulation thickness	6 mm
Temperature resistance	-35 °C - 100 °C
Sound insulation lining	TPE
Safety factor	1,54
Class	B2

Product details

max. outer pipe diameter	42 mm
Material dimension pipe clamp	35x4 mm
Width substructure	100 mm
Height base	110 mm
Length of substructure	250 mm
Load F_X	5,01 kN
Load F_Y	1,2 kN
Load F_Z hanging µ 0,2	5,5 kN
Load F_Z hanging µ 0,3	4 kN

MEFA Befestigungs- und Montagesysteme GmbH | Schillerstraße 15 | 74635 Kupferzell
+ 49 7944 64 0 | info@mefa.de | www.mefa.de

Product details

Load F_Z standing μ 0,2	6 kN
Load F_Z standing μ 0,3	4 kN

MEFA Befestigungs- und Montagesysteme GmbH | Schillerstraße 15 | 74635 Kupferzell
+ 49 7944 64 0 | info@mefa.de | www.mefa.de