Knot triangle 4-hole C-profile 45 V4A 90 ° Wing 102,5 x 102,5 mm

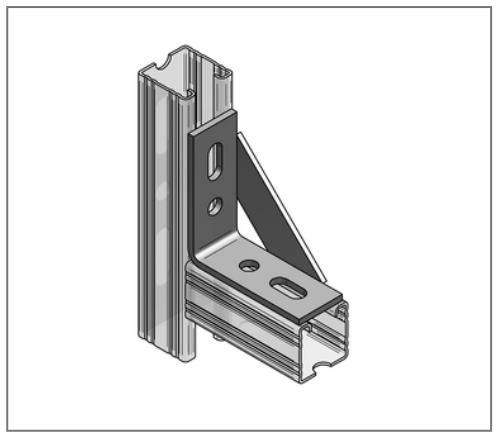

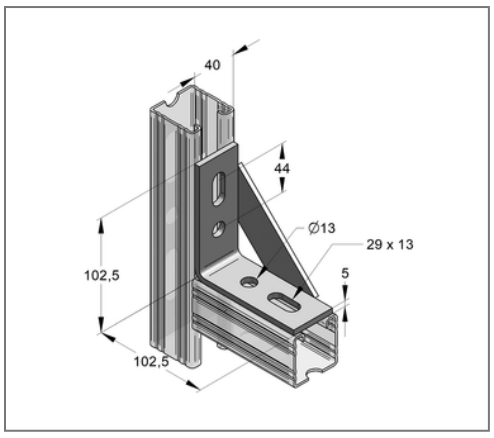

Commercial details

Part no.	048140701
EAN/GTIN	4250928459688
Packing unit	1 pcs
Quantity unit	pcs
Weight	0,375 kg/pc
Product group	13-054
Price unit	1

QR code

Certification

Specification

Application area	Corner connection of stainless steel C-profile rails 45.
Profile	C-profile

Technical data

Material	Stainless steel
Surrounding area	Indoor and outdoor areas

Product details

Hole-Ø	13 mm
Elongated hole	13x29 mm
Profile type	45
Material thickness	5 mm
Width material	40 mm
Length wing 1	102,5 mm
Length wing 2	102,5 mm
Angle	90 °

MEFA Befestigungs- und Montagesysteme GmbH | Schillerstraße 15 | 74635 Kupferzell
+ 49 7944 64 0 | info@mefa.de | www.mefa.de