Connector CENTUM XL 80 - XL 200 380x67x59 mm Elongated hole 14x40 mm

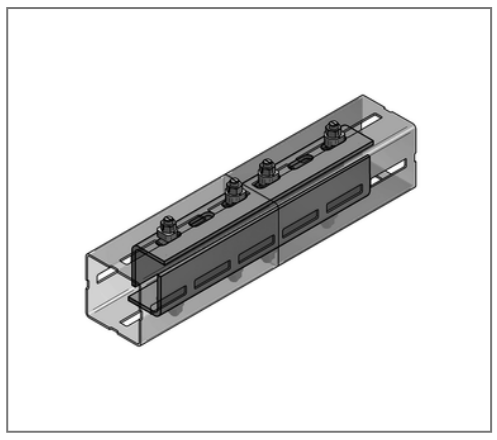

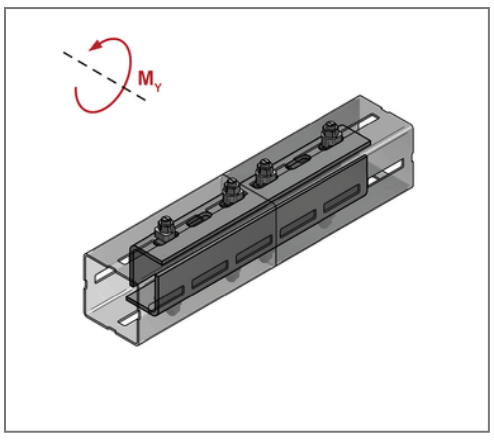

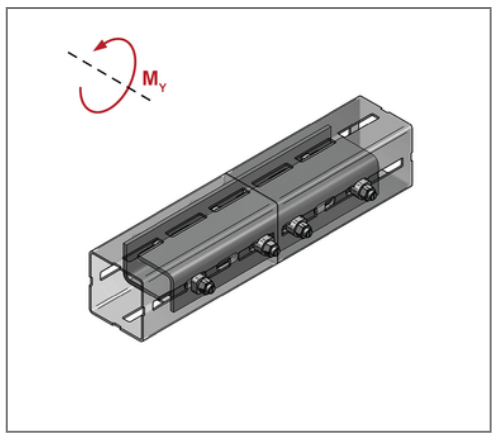

Commercial details

Part no.	1640005011
EAN/GTIN	4250928459398
Packing unit	1 pcs
Quantity unit	pcs
Weight	5,28 kg/pc
Product group	14-164
Price unit	1

QR code

Certification

TSP®

CE

Specification

Application area	Component for connecting two identical CENTUM® square profiles.
Profile	CENTUM
Profile type	XL 80, XL 100, XL 120 and XL 200
Scope of delivery	2 x u-steel, 8x CENTUM® T-lock M12x40

Technical data

Material	Steel
Material type	S235
Surface	hot-dip galvanized
Surface screw	Zinc-Nickel
Corrosion category	C4 high / C5 medium
Surrounding area	Indoor and outdoor areas

Product details

Width	67 mm
Height	59 mm
Thickness	6 mm
Length	380 mm
Tightening torque	120 Nm
Elongated hole	14x40 mm
Limited torque M_Y XL80 at screw position top/ bottom	1,25 kNm
Limited torque M_Y XL80 at screw position left/ right	0,85 kNm
Limited torque M_Y XL100 at screw position top/ bottom	2,5 kNm

Remark

Notice	Set including connecting components

MEFA Befestigungs- und Montagesysteme GmbH | Schillerstraße 15 | 74635 Kupferzell
+ 49 7944 64 0 | info@mefa.de | www.mefa.de

Product details

Limited torque M_Y XL100 at screw position left/ right	1,35 kNm

MEFA Befestigungs- und Montagesysteme GmbH | Schillerstraße 15 | 74635 Kupferzell
+ 49 7944 64 0 | info@mefa.de | www.mefa.de