Universal knot 4-hole V4A 152,5 x 152,5 x 5 mm for profile 45

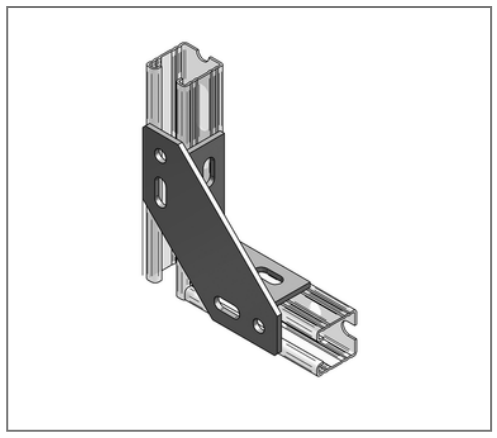

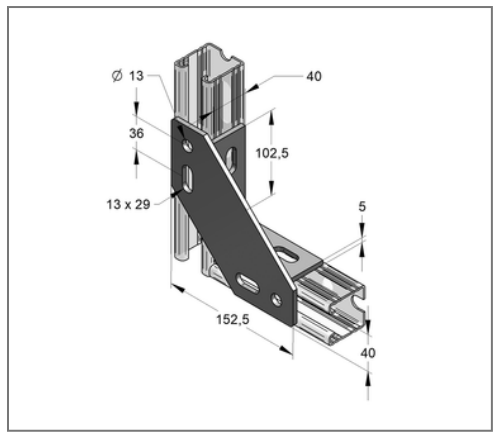

Commercial details

Part no.	0481409
EAN/GTIN	4250928457448
Packing unit	1 pcs
Quantity unit	pcs
Weight	0,840 kg/pc
Product group	13-054
Price unit	1

QR code

Certification

Specification

Application area	Corner joint of C-profile channels. Even with changing rail slot position.
Specification	4-hole
Profile type	45

Technical data

Material	Stainless steel
Material type	V4A
Surrounding area	Indoor and outdoor areas

Product details

Height H	152,5 mm
Length L	152,5 mm
Thickness S	5 mm

MEFA Befestigungs- und Montagesysteme GmbH | Schillerstraße 15 | 74635 Kupferzell
+ 49 7944 64 0 | info@mefa.de | www.mefa.de