Ventilation pipe clamp Doppio 20x1,5 DN 100 M8/M10 EPDM



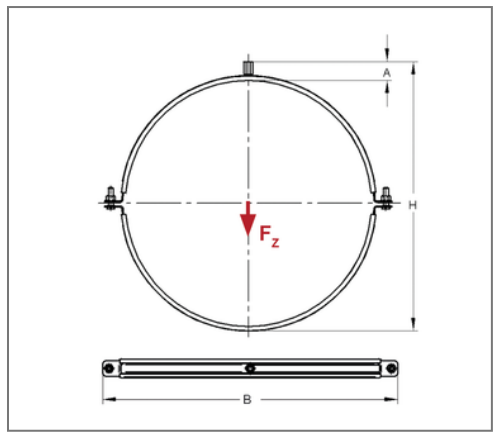

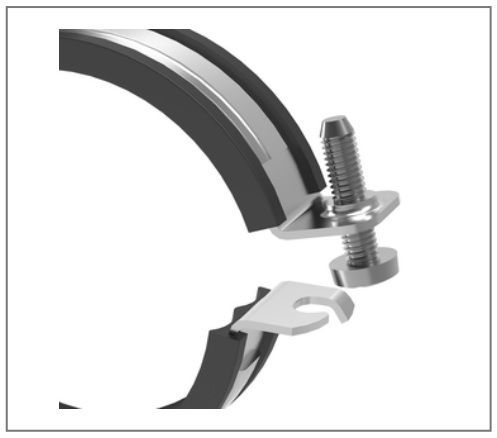

Commercial details

Part no.	0449100
EAN/GTIN	4250928410931
Packing unit	50 pcs
Quantity unit	pcs
Weight	0,160 kg/pc
Product group	08-044
Price unit	100

QR code

Certification

RAL GÜTEZEICHEN SCHRAUBENSYSTEME RAL-GZ 655-B

SCHALL-SCHUTZ DIN 4109

Baustoffklasse ●B2● "Normal entflammbar" nach DIN 4102

Specification

Application area	Pipe clamp for fastening ventilation pipes.
Specification	two-part
Connection	M8/M10
Closure	Snap-in closure

Technical data

Material	Steel
Material type	S235
Surface	galvanized
Corrosion category	C2 very high
Surrounding area	Indoor area
Insulation thickness	4,5 mm
Temperature resistance	-35 °C - 100 °C
Sound insulation lining	Rubber EPDM

Product details

Connection height A	17 mm
Width B	147 mm
Colour sound insulation lining	black
Height H	131 mm
Material dimension	20x1,5 mm
Load F_Z	0,61 kN
Outer pipe diameter	105 mm
Closure screw	M6

MEFA Befestigungs- und Montagesysteme GmbH | Schillerstraße 15 | 74635 Kupferzell
+ 49 7944 64 0 | info@mefa.de | www.mefa.de