Conical stud VMZ A 60 M10 Length 85 mm

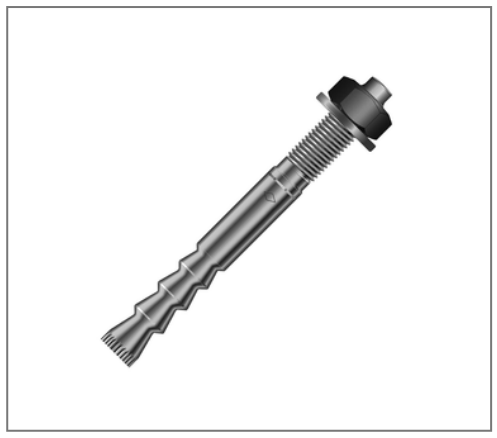

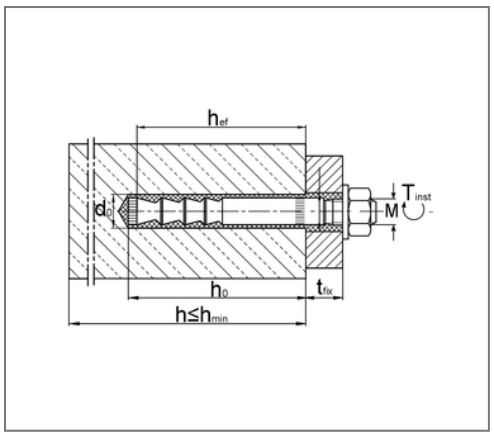

Commercial details

Part no.	221832205101
EAN/GTIN	4043315053381
Packing unit	10 pcs
Quantity unit	pcs
Weight	0,0610 kg/pc
Product group	07-221
Price unit	1

QR code

Certification

ETA- 04/0092

ZIVILSCHUTZ

Brandschutz-geprüft

SEISMIC M10 - M16

Specification

Brand	MKT
Application area	For cracked and non-cracked concrete C20/25 to C50/60.
Fire protection	yes
Application area	Concrete

Technical data

Material	Steel
Surface	galvanized

Product details

Thread	M10
Length	85 mm
Wrench size	17
Tightening torque	15 Nm
Drilling hole depth	65 mm
Length dowel	85 mm
max. clamping thickness	10 mm
Setting depth	63 mm

Remark

Delivery time	3 working days, ex works

MEFA Befestigungs- und Montagesysteme GmbH | Schillerstraße 15 | 74635 Kupferzell
+ 49 7944 64 0 | info@mefa.de | www.mefa.de