Threaded bolt M8 x 65 mm galv.

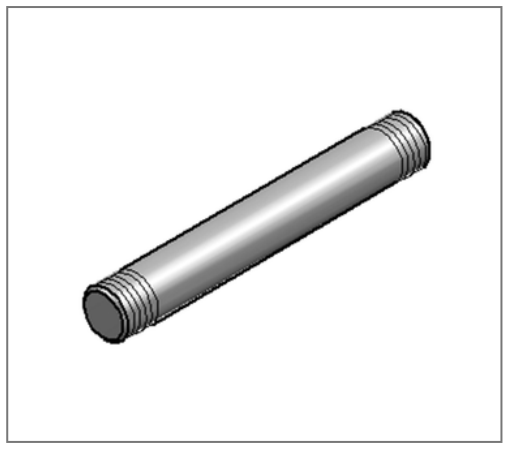

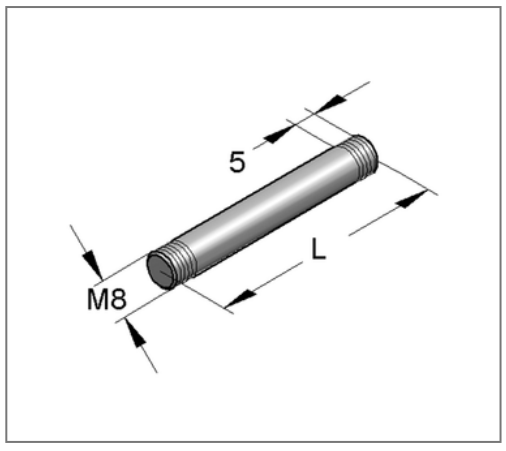

Commercial details

Part no.	0766658
EAN/GTIN	4250928417459
Packing unit	100 pcs
Quantity unit	pcs
Weight	0,0210 kg/pc
Product group	05-076
Price unit	100

QR code

Technical data

Material	Steel
Surface	galvanized

Product details

Thread	M8
Length L	65 mm