Sliding plate 350 x 250 x 12 Connection 2 x 1”

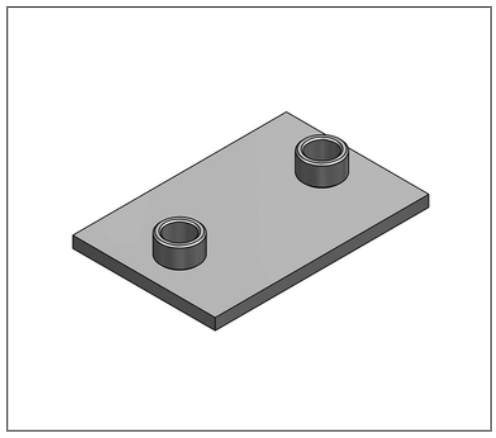

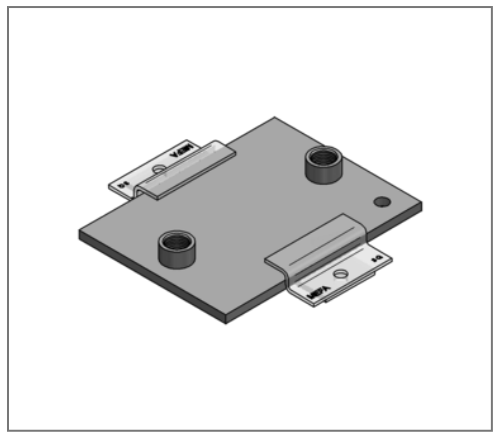

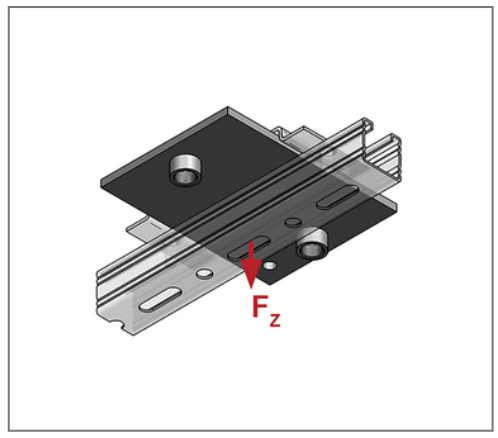

Commercial details

Part no.	0771911
EAN/GTIN	4250928418401
Packing unit	1 pcs
Quantity unit	pcs
Weight	8,55 kg/pc
Product group	04-077
Price unit	100

QR code

Technical data

Material	Steel
Material type	S235
Surface	galvanized
Corrosion category	C2 very high
Surrounding area	Indoor area

Product details

Connection	1”
Length L	350 mm
Width B	250 mm
Thickness S	12 mm
Load F_Z	7,4 kN
Axial dimension a	25 mm
Number of connections	2
max. sliding distance axial hanging	200 mm
max. sliding distance axial standing	300 mm

Remark

Note	delivery time on demand

MEFA Befestigungs- und Montagesysteme GmbH | Schillerstraße 15 | 74635 Kupferzell
+ 49 7944 64 0 | info@mefa.de | www.mefa.de